SCHEMATIC DIAGRAM ELEKTA CTR-2035 EMK

www.tvservice.org - Free schematic diagrams

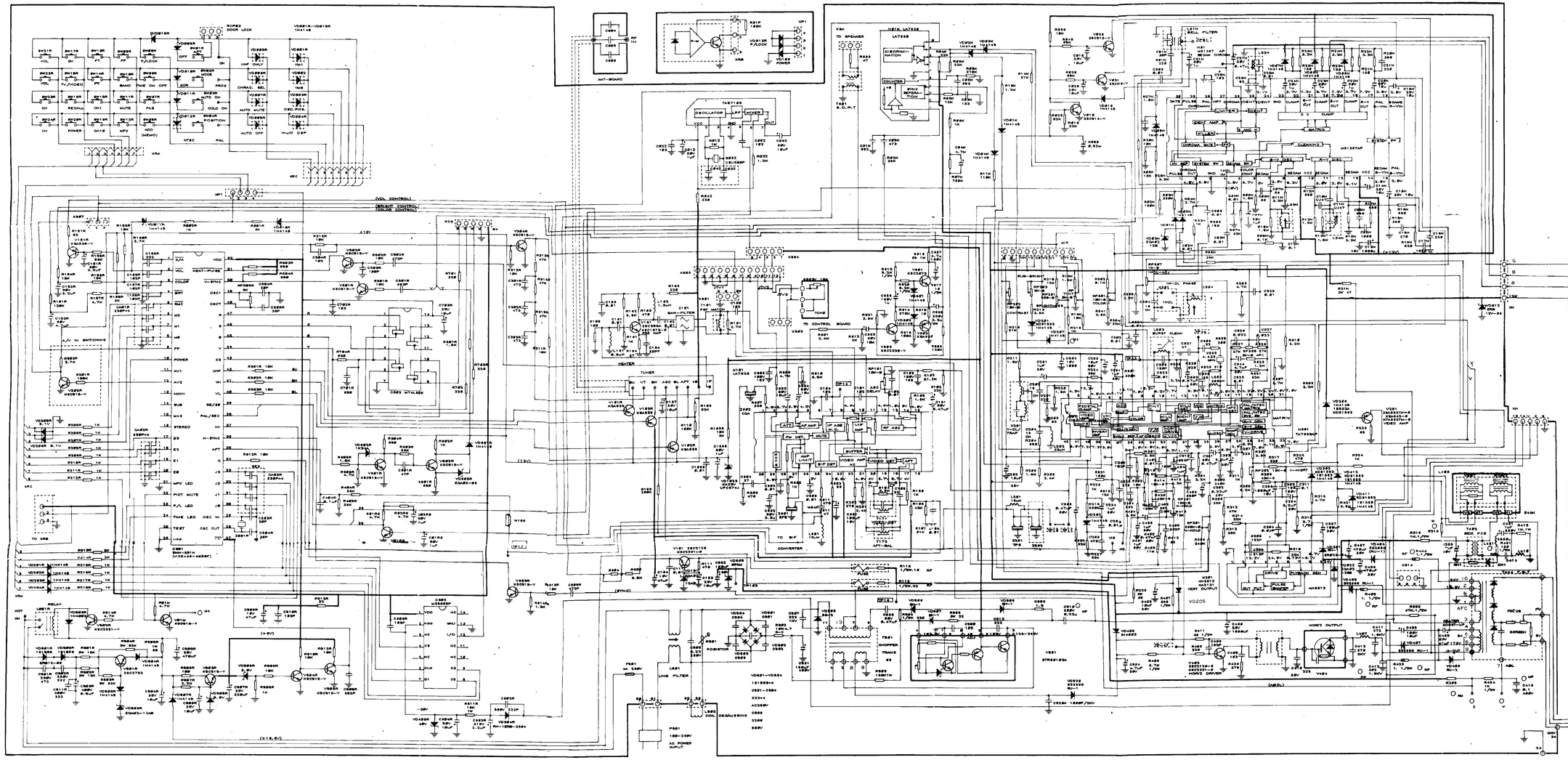

EXPRESSION

Resistance is shown ohm k 1,000 M 1,000,000

Unless otherwise noted in schematic all capacitor less than 1 are expressed in μF the values.

Unless otherwise noted in schematic all inductor values are expre in μH and the values less than 1 in mH.

NOTE

The circuits are subject to change without notice to improve the picture quality

OBSERVATION OF VOLTAGES AND WAVEFORMS

1. Voltages read with VTVM from point shown to chassis ground in voltage 220 240V colour bar signal
2. Voltages reading may vary 20%
3. All waveforms are taken using a wide band oscilloscope and a low capacity probe
4. Check FINE TUNING AGC BRIGHTNESS CONTRAST and COLOUR first particulars
5. Waveforms are taken using a standard colour bar signal

SYSTEM NOTE

BASICALLY THIS SCHEMATIC DIAGRAM IS USED FOR THE 3-SYSTEM CHASSIS (PAL SECAM N4.43) BUT IF THESE "K" ITEMS (FOR EXAMPLE ICKO1 ROIK COIK ...) AND VR TINT ARE DELETED THIS S D CCAN BE USED FOR THE 2-SYSTEM CHASSIS
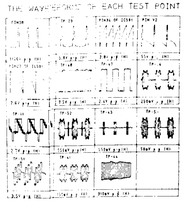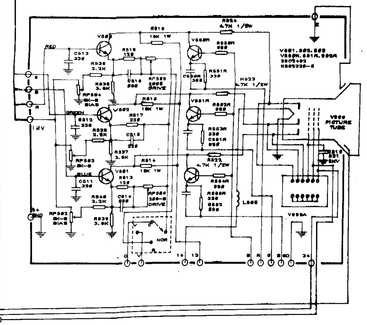
THE WAVEFORMS OF EACH TEST POINT